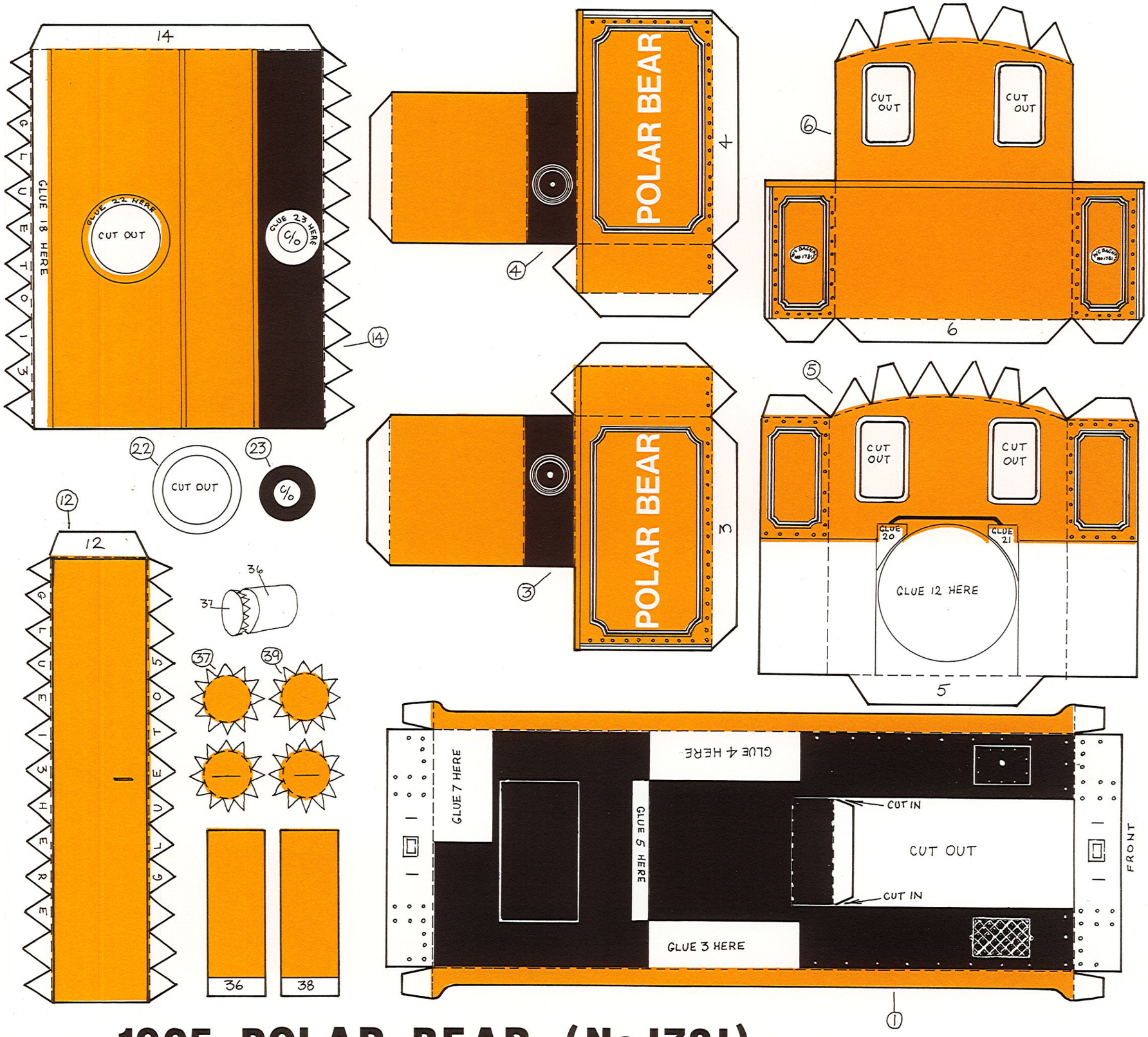

1905 POLAR BEAR (No 1781)

INSTRUCTIONS

FOLLOW ALL INSTRUCTIONS CAREFULLY: CUT OUT PIECES IN ORDER, MARK NUMBER ON THE BACK OF EACH PIECE. GENTLY SCORE ALONG DOTTED LINES TO EASE BENDING. CUT OUT (%) ALL SPACES MARKED 'CUT OUT'. MAKE SURE TO CUT INTO PIECES WHERE INDICATED BY THICKER LINE. FOR BEST RESULTS USE SPECIAL CRAFT KNIFE AND GUM OR PAPER GLUE. COLOUR WHEELS AND RUNNING GEAR IN GREY, FRONT AND REAR BUFFER PLATES IN RED. USE ACETATE SHEET FOR WINDOWS. IF DESIRED FINISH MODEL WITH AEROSOL SPRAY TO GIVE PROTECTIVE SHEEN.

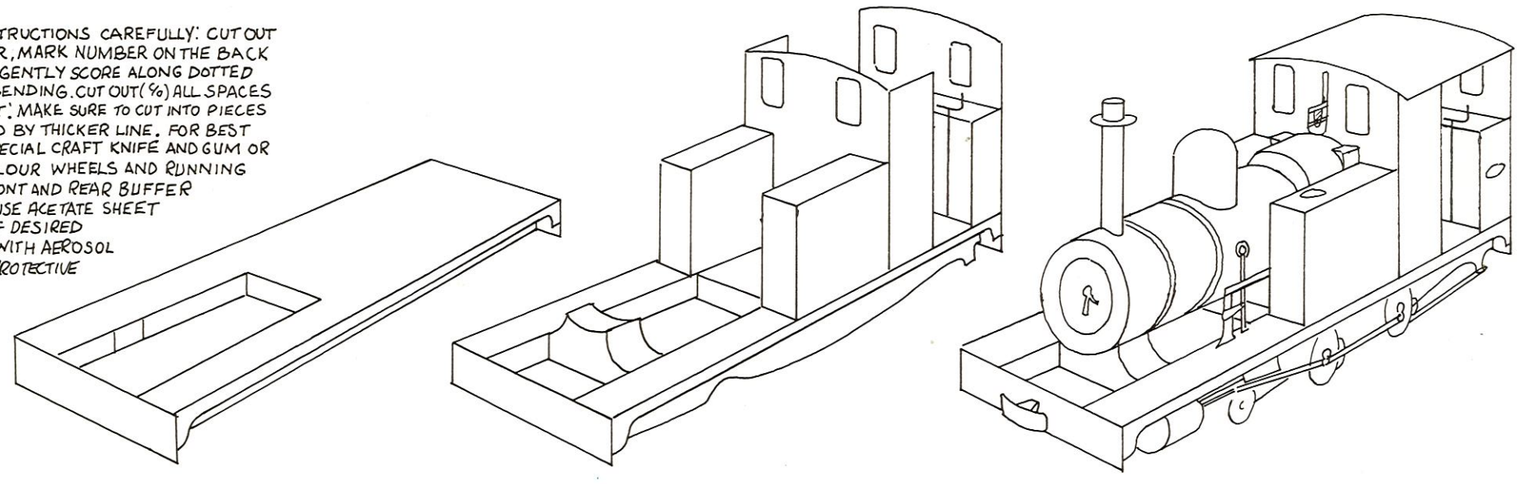

1) % 1 SCORE BEND TO SHAPE & GLUE
2) % 2 SCORE BEND TO SHAPE & GLUE. GLUE TO UNDERSIDE OF 1.
3) % 3 & 4 SCORE BEND TO SHAPE & GLUE. GLUE TO POSITION ON 1.
4) % 5 SCORE BEND GLUE TO POSITION ON 1.
5) % 6 SCORE BEND GLUE TO POSITION ON 1.
6) % 7 SCORE BEND GLUE TO POSITION ON 1.
7) % 8 SEAT, SCORE BEND & GLUE. GLUE TO 6 & 7.
8) % 9 SCORE BEND TO SHAPE & GLUE. GLUE TO POSITION ON 2.
9) % 10 GLUE TO 2. % 11 GLUE TO 2.

BOILER

10) % 12 SCORE DO NOT BEND. CURVE INTO CYLINDER SHAPE (IT MAY HELP TO DRAW CARD THROUGH, BETWEEN A RULER EDGE & THUMB) & GLUE. % 13, GLUE TO 12.
11) % 14 SCORE CURVE INTO CYLINDER SHAPE & GLUE.
12) % 15, 16 & 17. GLUE 17 TO 16 & 16 TO 15.
13) GLUE 15 TO 14. THEN GLUE 14 TO 13.
14) % 18 SHAPE AROUND 14 & GLUE TO SHAPE.
15) % 19 BAND (2 PIECES). GLUE AROUND BODY OF 14. GLUE BOILER TO POSITION ON TANK, MAKING SURE THE FUNNEL HOLE IS IN LINE ON THE TOP.
16) % 20 & 21 SCORE BEND TO SHAPE & GLUE. GLUE TO POSITION ON 5.
17) % 22 & 23 GLUE TO POSITION ON 14.
18) % 24 SCORE SHAPE AS (IN DIAGRAM) & GLUE. GLUE TO POSITION ON 14
19) % 25 SHAPE INTO CYLINDER & GLUE. % 26 SLOT OVER 25 & GLUE (AS DIAGRAM). SLOT INTO 14 & GLUE.
20) % 27 & 28. GLUE TO SIDE OF BOILER (AS IN DIAGRAM).
21) % 29 SCORE BEND & GLUE. SLOT IN POSITION ON BOILER (AS DIA)
22) % 30 FIRE BOX, GLUE INSIDE CAB. PAINT INSIDE OF CAB CREAM. USE ACETATE FOR WINDOWS. % 31 ROOF, GLUE TO TOP OF CAB.
23) % 32 & 33 GLUE TO 10 & 11. % 34 & 35 GLUE TO INSIDE OF 10 & 11 (AS DIAGRAM).
24) % 36 & 37 (2 PIECES) CURVE 36 INTO CYLINDER & GLUE. GLUE 37 TO EACH END OF CYLINDER. REPEAT FOR 38 & 39 (AS IN DIAGRAM).
25) % 40 & 41 GLUE TO WHEELS & PISTON.
26) % 42 & 43 SCORE BEND & GLUE. (AS IN DIAGRAM). GLUE TO FRONT & REAR OF ENGINE.

AMBERLEY CHALK PITS

Designed by Geoffrey Stinton © Copyright reserved

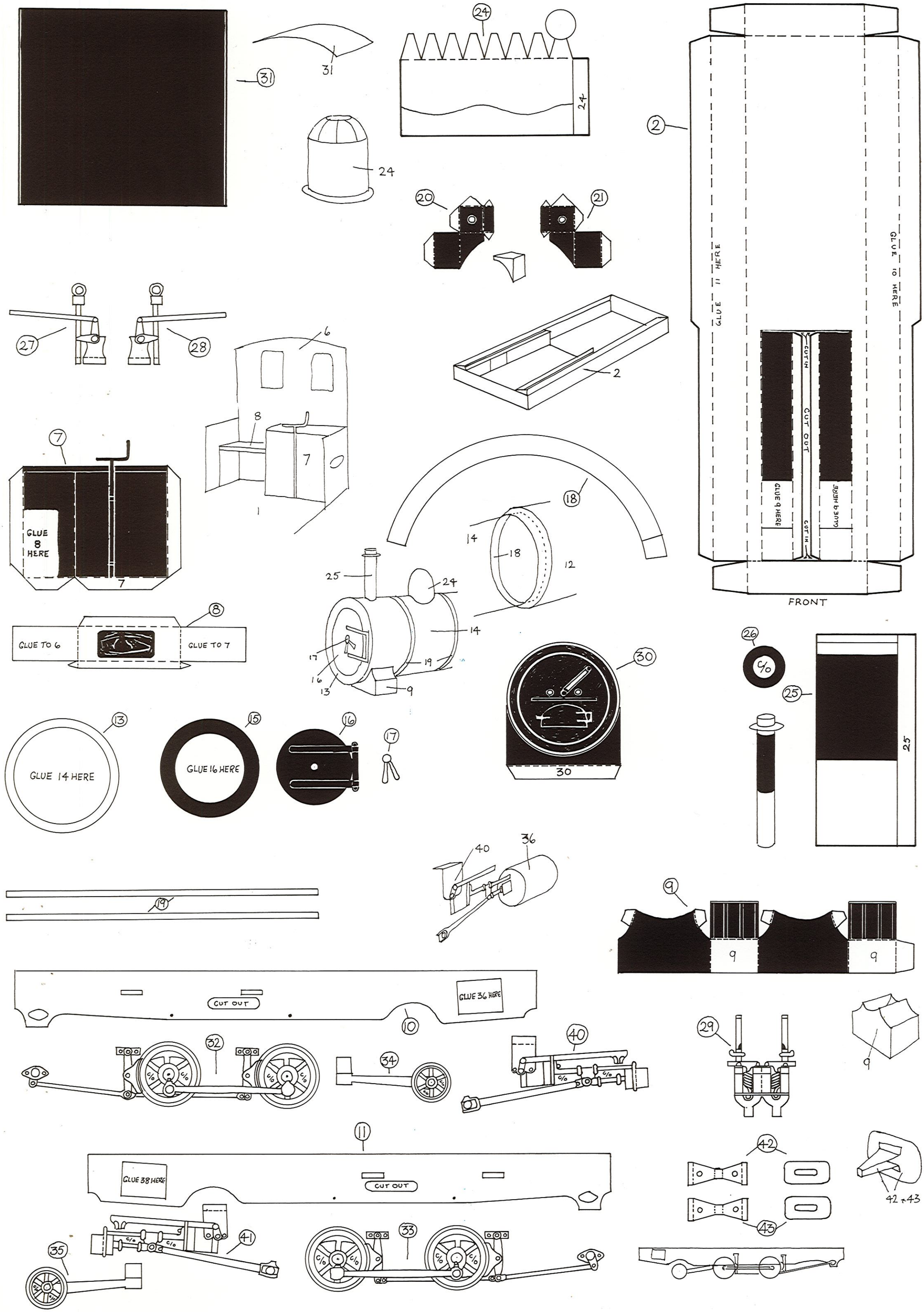

Designed by Geoffrey Stinton © Copyright reserved